DS-1331HZ-C

Outdoor Housing

Features:

- Adopt side-cover design for convenient installation and maintenance.
- Adopt stainless steel dual-hasp design, water-proof up to IP 67
- Partial glass silk print to protect imaging area
- Built-in automatic temperature control system to ensure stable running.

Notice:

- Read the instructions carefully and observe all warnings before installing this equipment.
- Turn off the power before wiping this equipment, do not use liquid or spray cleaning agent.
- Do not install on unstable bracket.
- Protect the power line, especially the flexible line of the plug and camera.

Order Model:

DS-1331HZ-C

Dimension:

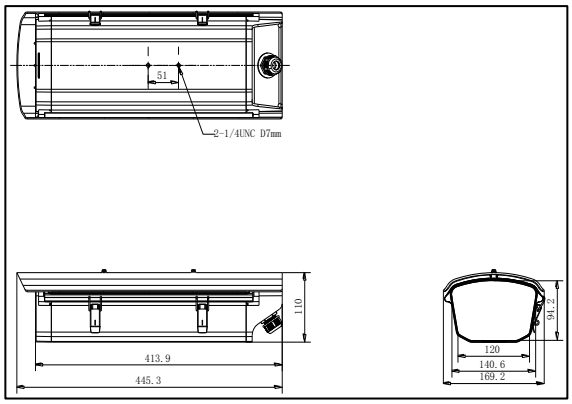

Parameter:

Parameters \ Model	DS-1331HZ-C
	Outdoor Housing
Produce features	Contain fan, suitable for high temperature environment
Working temperature	-20℃ ~ +60℃
Automatic temperature control range	Without heating Fan on: 45°±5℃ Fan off: 35°±5℃
Power	DC12V
Power consumption	Fan: 4W
Protection level	IP67 7.16
Material	Main: aluminum alloy Window: glass
Dimension(mm)	455.3×169.2×110
Matching power supply	DC12V 2A Power pack
Weight	1900g

Installation:

DS-1293ZJ Wall Mount

DS-1214ZJ Horizontal Pole Mount

DS-1269ZJ Pendent Mount
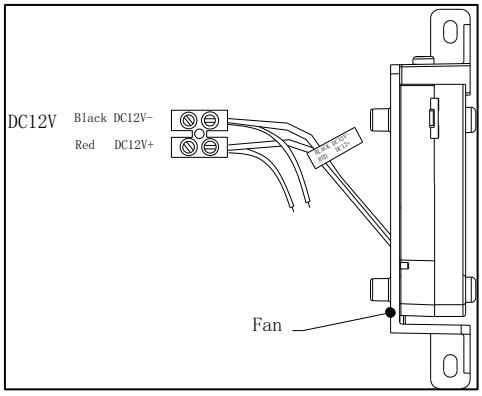
Wiring: